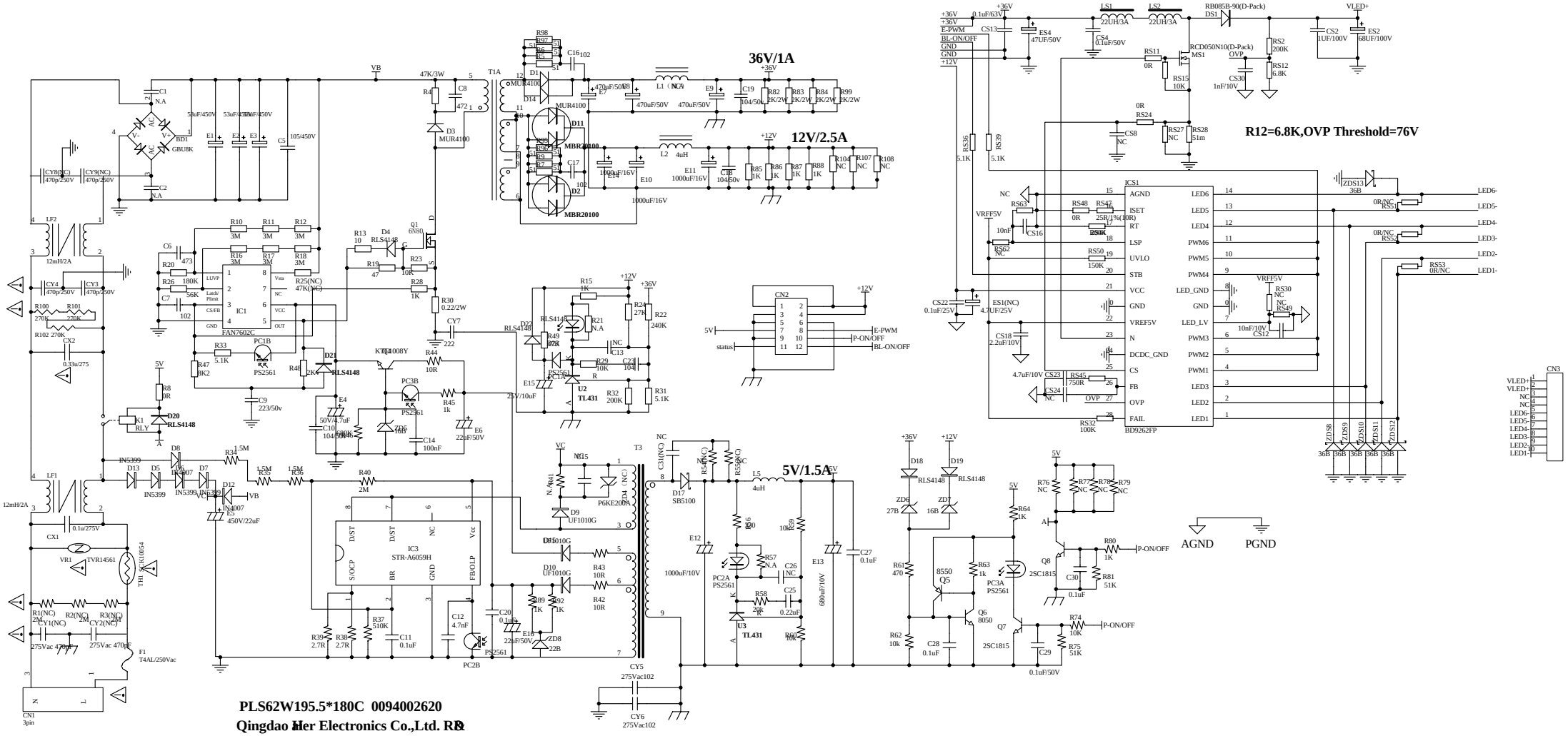
36V/1A
12V/2.5A
5V/1.5A
R12=6.8K,OVP Threshold=76V
AGND
PGND
IC1
FAN7602C
IC3
STR-A6059H
ICS1
BD9262FP
T1A
T3
CN1
3pin
CN2
CN3
PLS62W195.5*180C 0094002620
Qingdao Her Electronics Co.,Ltd. R&